Project 1, Part 2

Controlling and Modding a Badass Distortion Circuit

v03, 10.08.11

©2011 by Joe Gore

What happens next:

In Part 1 of this series, we assembled a simple distortion circuit on an electronics breadboard. Here in Part 2, we will:

- modify the distortion sound with diodes
- add a gain control
- add a master volume control
- start customizing the circuit to taste

(In case you were wondering, Part 3 will cover transferring these breadboarded components to a circuit board, and Part 4 will show how to assemble everything in a stompbox enclosure.)

See "Project 1, Part 1" for a list of necessary tools and parts, plus some recommended reading.

©2011 by Joe Gore

Sculpting the Distortion

At the end of Part 1, we'd arrived at a loud, crude distortion sound. With all due respect to loudness and crudity, we will now refine things a bit.

In Part 1's v01 schematic, the transistor is working full-bore. The problem is, the circuit is so loud and distorted that it can easily overwhelm an amp's input. When that happens, the tone is overly compressed and lacking in high-end excitement. In other words, the sound is huge, but un-dynamic, and probably too bass heavy.

So let's kick things *down* a notch.

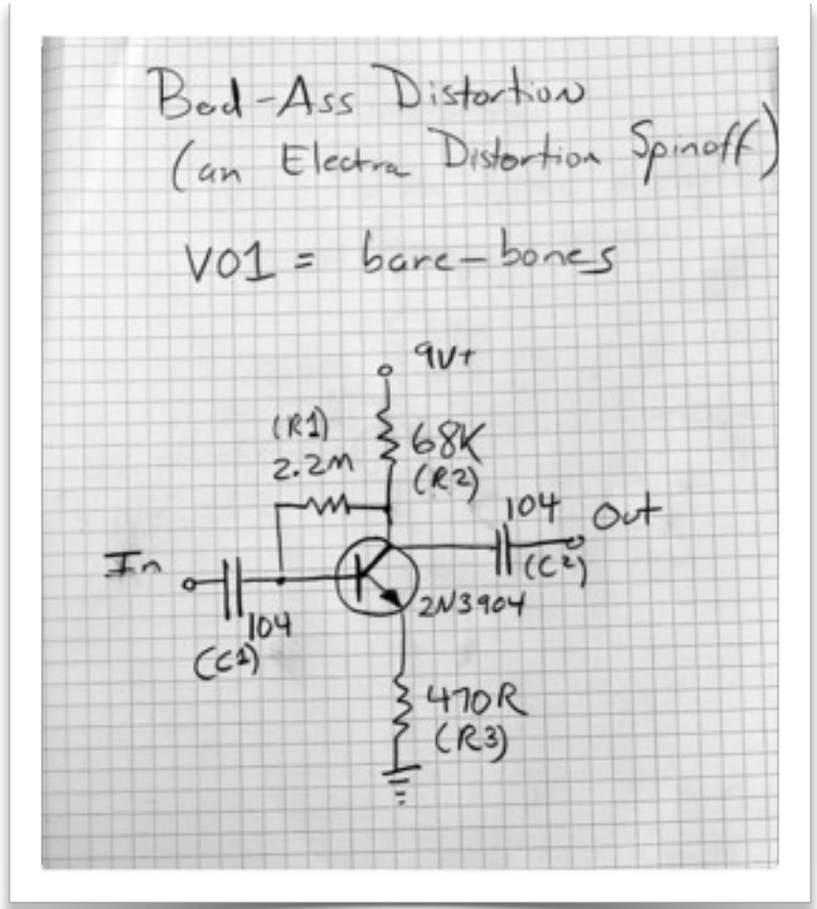

©2011 by Joe Gore

Bad-Ass Distortion Schematic, v02

This second version of the schematic adds two new components between C2 and the output: a pair of diodes.

These signify diodes.

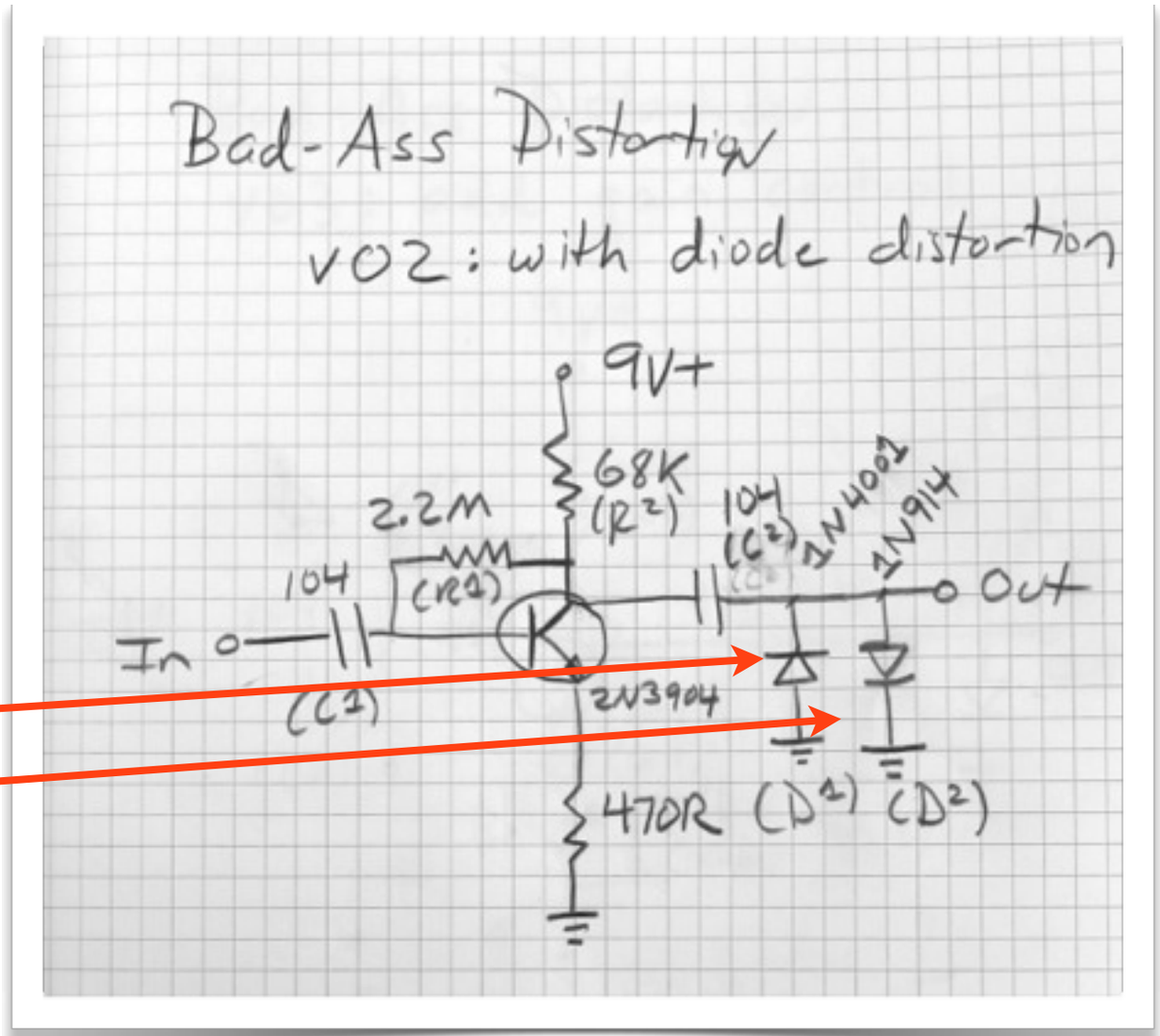

©2011 by Joe Gore

Meet the Diode

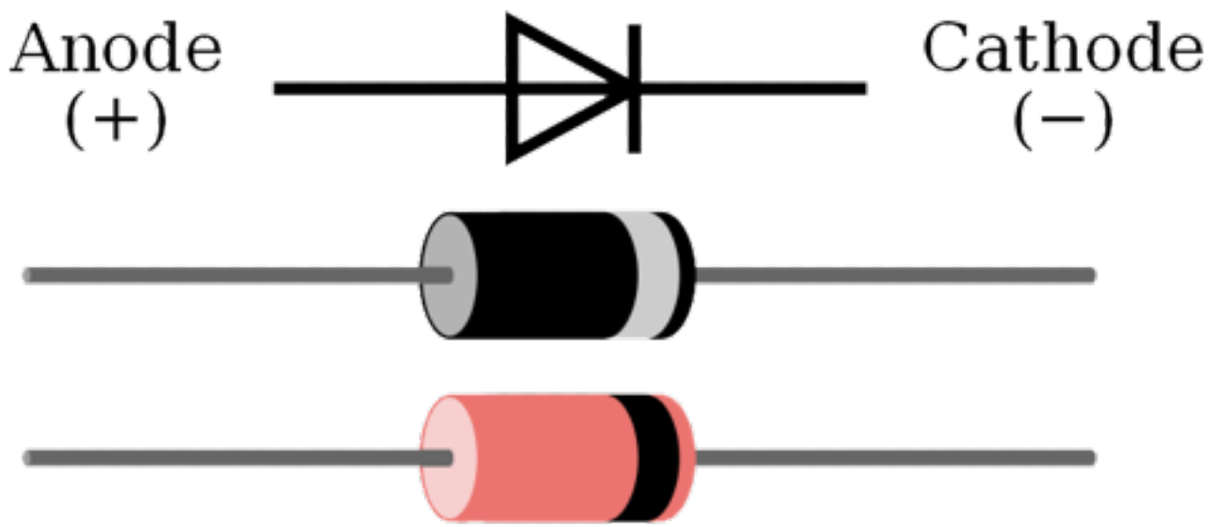

Diodes are components that transfer current on one direction, but block it in the opposite direction. That means that, unlike the resistors and caps we've used so far, their orientation *does* matter (in other words, they are polarized). Their positive terminals are calls anodes and their negative terminals are called cathodes. The cathode is denoted by a band at one end of the component, and by the perpendicular line in the schematic symbol.

©2011 by Joe Gore

Types of Diodes

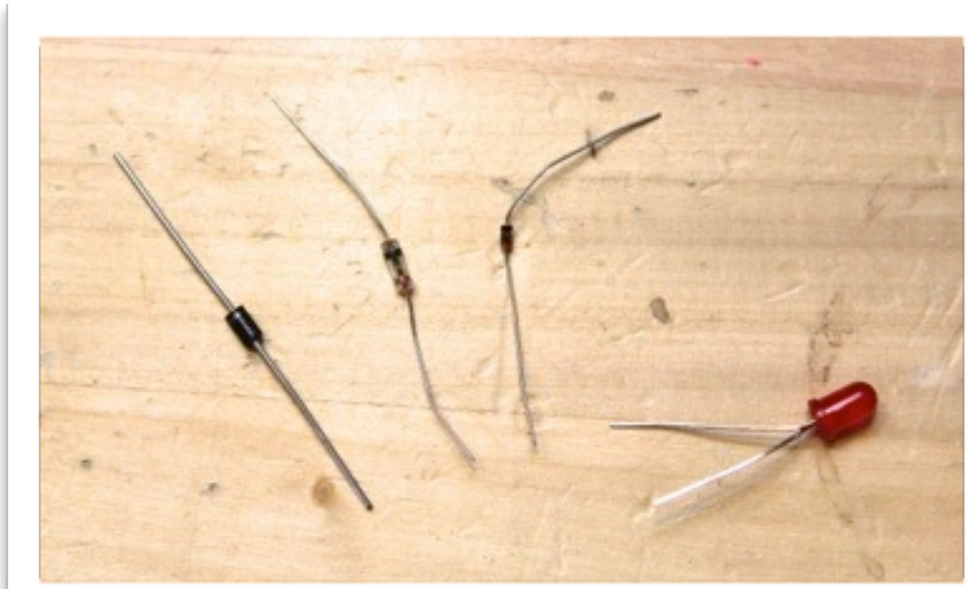

Diodes are often silicon, but can also be germanium. LEDs are also diodes. On leg of the LED is usually slightly longer than the other. This is the anode (positive side).

When you add a pair of diodes between the audio signal and ground, oriented in opposite directions, the result is a distinctive type of distortion. Diodes are deployed this way in countless stompbox designs: primitive '60s pedals such as the Jordan Bosstone, '70s stompboxes such as the MXR Distortion+ and DOD 250, and *anything* related to the Ibanez Tube Screamer (which means something like 90% of current boutique overdrives).

©2011 by Joe Gore

Adding the Diodes

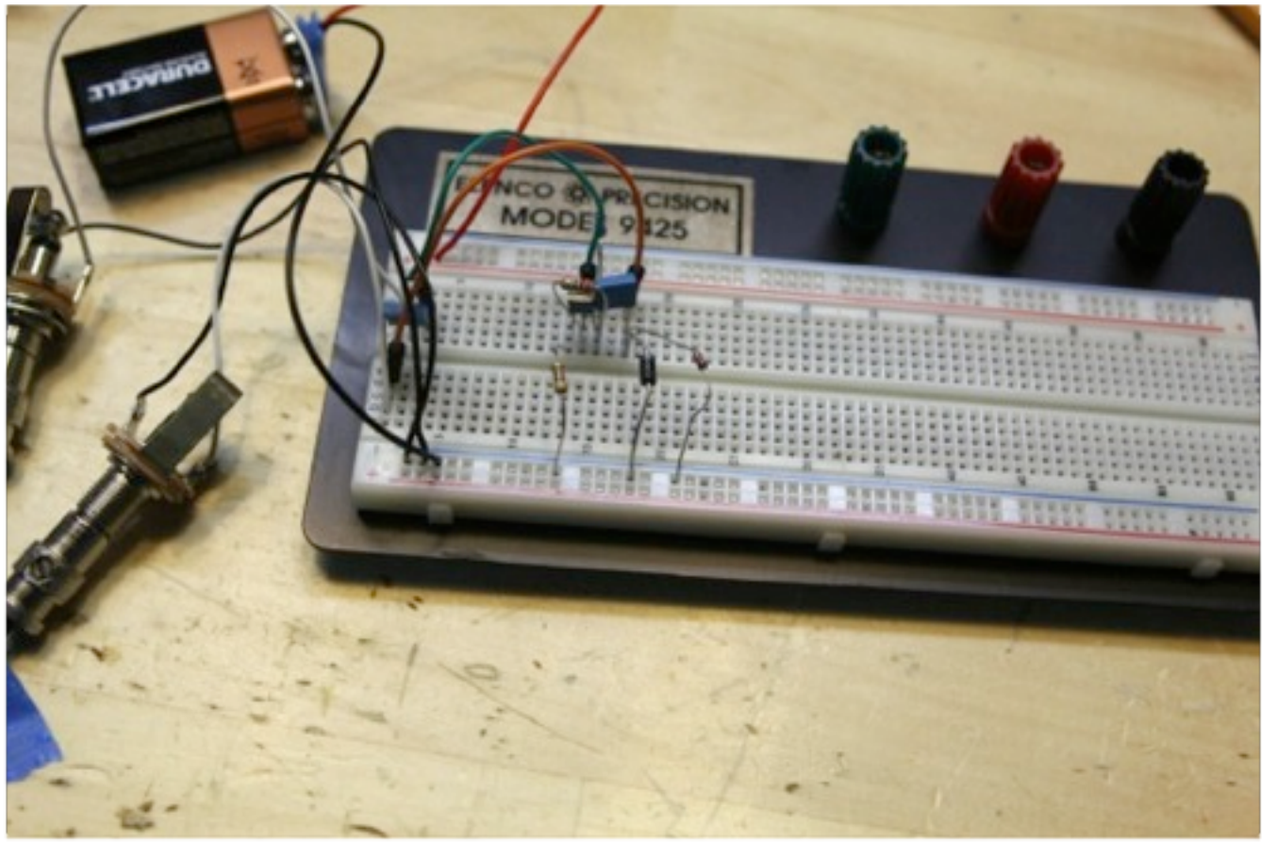

Let's pop two diodes into the circuit. Connect the anode of the 1N4001 diode and the cathode of the 1N914 diode to ground. Then press the other ends of both diodes into the same vertical bus where the right leg of C2 connects to the jumper wire going to your output.

You should immediately notice a substantial decrease in volume. This is a good thing—believe me, the circuit will still have plenty of *oomph*. The distortion will sound more compressed and controlled, with a nice graininess. (It's okay if you prefer the tone without diodes—you can always build your pedal without them.) If you hear nothing, double-check the placement and orientation of the diodes. If they're not oriented in opposite directions, they'll kill the signal.

©2011 by Joe Gore

Fun Diode Fact

Why two different diode types? Because changing diode values changes the tone. In fact, you can pretty much use any common diodes in this circuit, so long as one is connected anode to ground, and the other cathode to ground. Try it yourself with any diodes you have around, including LEDs. (The light won't glow, but you'll *hear* it!)

You're now doing what countless pedal designers have done: Experimenting with different diode combinations till you find one you love. Germanium diodes, such as the 1N34A, tend to sound a little warmer/tubbier, and LEDs tend to be brighter and glassier. Just mix and match. There's no science to it. (Actually, there is, but it's so boring and incomprehensible that it's probably better to just go crazy and have fun here.)

One more wrinkle: You can use more than two diodes, so long as you have at least one oriented in each direction. Try adding a third diode alongside these two, then try flipping it the other way. Then a fourth. Keep testing till you find something awesome. Jot it down so you can remember it when we assemble our circuit board in Part 3.

For now, I'm going to go with the configuration from the v02 schematic, which sounds pretty darn good.

©2011 by Joe Gore

Controlling the Gain

As previously mentioned, the circuit is currently configured to extract the maximum gain/distortion from the transistor. Now let's hear how it sounds with the gain dialed back.

The resistor connecting the transistor emitter to ground determines the amount of gain. The 470R resistor we've used has a very low value, and adds only a bit of resistance. If we add a higher-value resistor, there will be more resistance, and therefore less gain.

Try replacing the 470R resistor with a 10K resistor. The tone will clean up a lot, though it'll still be louder and more distorted than if the circuit was bypassed. Try any resistors with values up to 10K or so, and observe the results.

Now, if only there were a way to let us set the amount of gain on fly, without swapping components. (I think you know where this is going....)

©2011 by Joe Gore

Meet the Potentiometer

Potentiometers, or "pots," are simply adjustable resistors. The volume and tone pots in your guitar do their job by specifying how much current is allowed to flow to ground. The pot's value tells you the amount of resistance applied when the pot is turned all the way down.

If we replace the resistor between the emitter and ground with a 10K pot, we can dial amount of gain between the clean-sounding 10K resistor we just heard, and the dirtier sound we started with.

The pot's three lugs are numbered in a standardized fashion. With the shaft facing toward you, lug 1 is on the left, lug 2 in the middle, and lug 3 on the right.

But since you must flip the pot around to solder it, you need to get in the habit of numbering the lugs with 3 on the left and 1 on the right.

The full signal usually enters at lug 3. Lug 2 carries the variable signal, its output changing as you rotate the shaft. Sometimes one or more lugs are connected to ground.

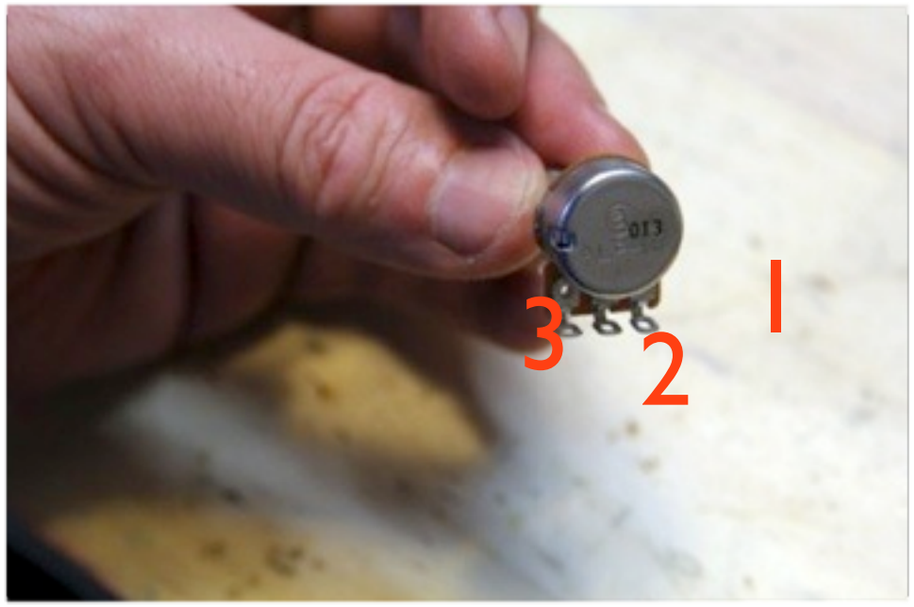

©2011 by Joe Gore

Snip that Tab Thingie

While we're talking pots, use your wire cutter to snip that little tab that protrudes next to the pot shaft. Do the same with any other pots you use for these projects. (The tab would get in the way when we eventually mount these parts in an enclosure.)

©2011 by Joe Gore

Soldering the Pots

Strip about a quarter-inch of white wire and insert it through lug 3 of a C10K pot. Fold the wire over using a needle nose pliers. Hold it in place with the tip of the iron, and then touch the solder to the lug. Leave about 2 1/2 inches of wire attached to the pot lug.

If you don't have a C10K pot, substitute the more common B10K.

(FYI, the letter at the beginning of a pot's name refers to the pot's response curve. A-series pots have a logarithmic curve and are often used as volume controls. B-series pots are linear, and are used in most other instances. The rarer C-series pots are *reverse* logarithmic, and I've specified one here because in this instance, it puts more of the tones you'll want under your fingertips. If you ever encounter a pot where all the cool sounds are clustered together toward one end of the shaft's range, that means the designer probably should have used a pot whose name started with a different letter.)

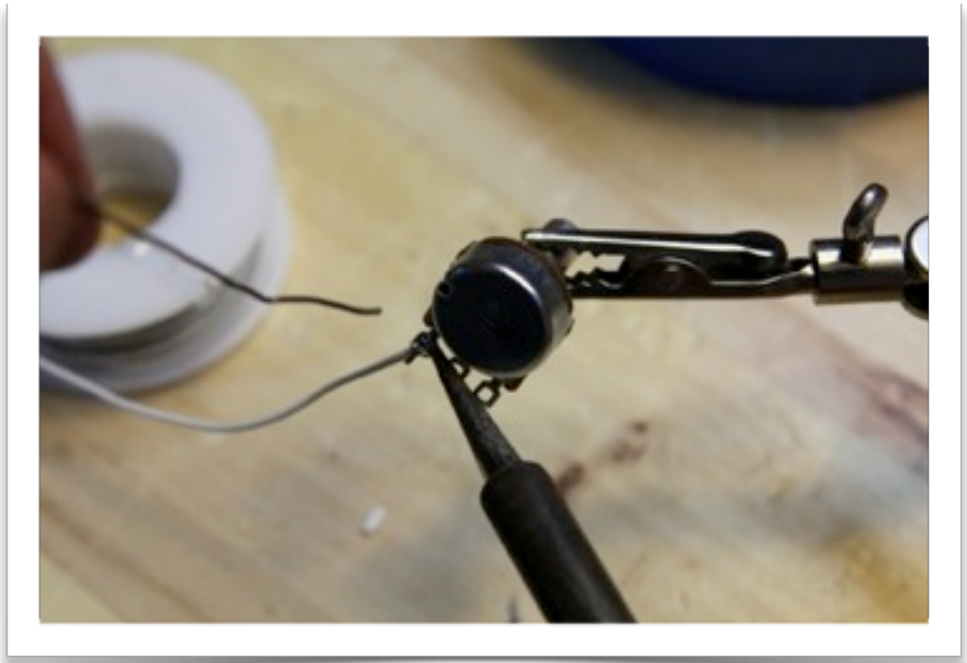

©2011 by Joe Gore

Soldering the Pots

Solder similar lengths of wire to the other two lugs on the C10K pot. And since we're in pot mode, solder three more wires to an A100K pot.

As a visual aide, I suggest using black wire for the connections that will go to ground, and white for the rest. In this case, that means black wire for C10K lugs 1 and 2, and also lug 1 of the A100K pot. Use white wire for the other three lugs.

Snip off any extra wire protruding from the solder lugs. The lugs shouldn't touch each other. If one gets bent out of shape, straighten it gently with your pliers.

Remember: Viewed from this angle, the pot lugs are number from left to right.

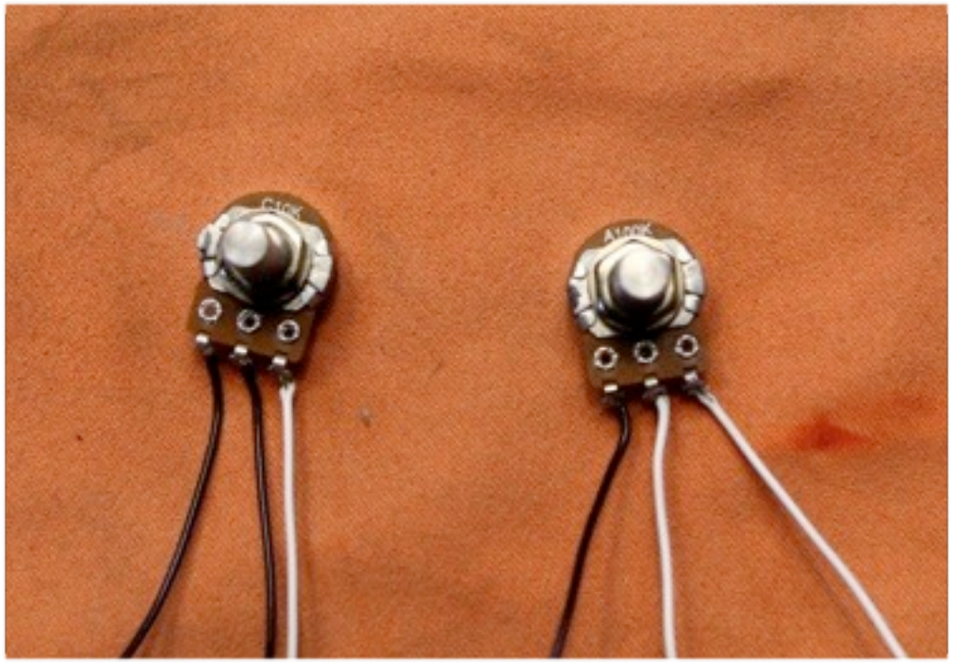

©2011 by Joe Gore

Adding the Gain Pot

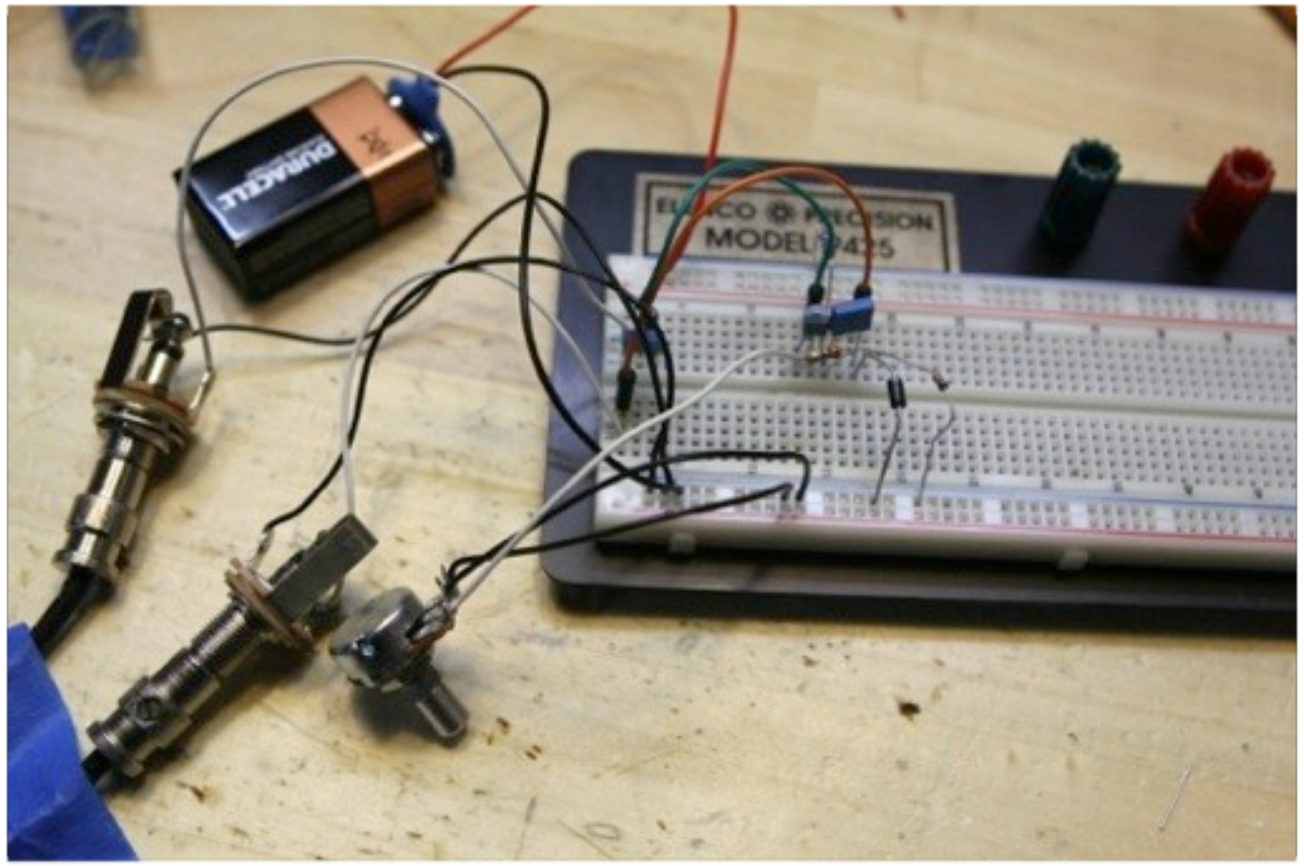

Place the C10K pot where the 470R resistor used to be. Connect lug 3's white wire to the transistor emitter, and the other two wires to ground. (Yes, we might also have used only one of the two black wires, and then used a short length of wire to connect lugs 2 and 3 right at the lug, as opposed to using three longer wires.)

©2011 by Joe Gore

Adding the Gain Pot

You should now have a working gain pot that sounds dirtier as you turn it clockwise. The updated schematic appears below.

Useful tip: If a pot ever behaves in the opposite manner from what you want (for example, a volume control that gets quieter as you rotate it clockwise), you can correct it simply by reversing the wiring of lugs 1 and 3.

Non-useful tip: When wired this way, with two lugs connected to the same destination, the potentiometer can be called a "variable resistor."

Lug 1 of the C10K pots connects to the transistor emitter.

Lug 3 goes to ground

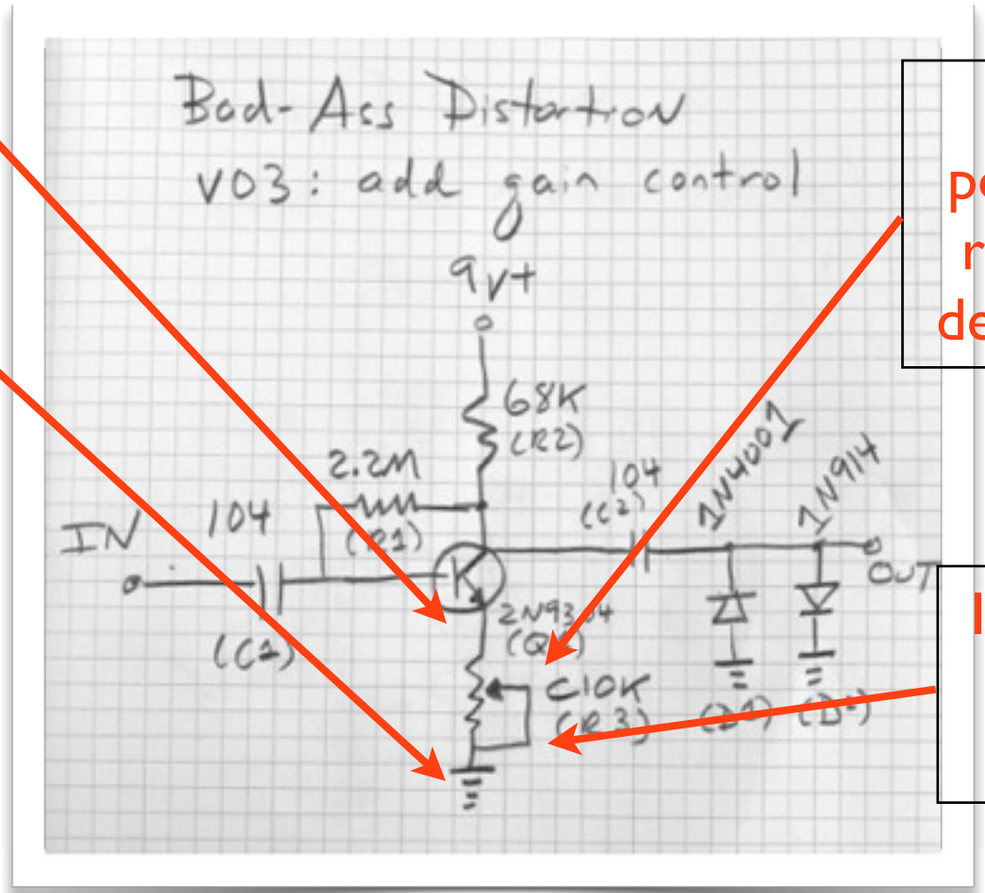

The arrow pointing into the resistor symbol denotes pot lug 2

In this instance, lugs 2 and 3 are connected.

©2011 by Joe Gore

Super-Cool Resistor/Pot Trick

You can substitute a pot for pretty much any fixed resistor. Sometimes it yields great results, and sometime not. For example, could try that with R2 and our circuit by replacing it with, say, a 100K pot, but sadly, you won't hear anything dramatic—it'll just crap out if the value gets too low. (The same goes for our R1.) But in many other instances, you'll find cool things this way.

Anytime you see a wacky pedal with tons of knobs, chances are the designer simply replaced many fixed resistors with pots. That was the notion behind Zachary Vex's Fuzz Factory, the best-selling boutique pedal of all time, and still one of the coolest.

To find a perfect resistor value, temporarily replace it with a pot. Spin the shaft till the circuit sounds great. The remove the pot from the circuit, and measure the resistance in its current position by setting your multimeter to "Ω" and touching the probes to lug 2 and to ground. Select the resistor value closest to that reading and pop it into the circuit.

©2011 by Joe Gore

Adding the Volume Pot

We've almost finished our circuit! All we need it a master volume control.

Remove the jumper wire that connects the right leg of C2 to the output, and plug it into a nearby empty bus. Take the A100K pot we've prepared, and connect the lug 3 wire to the right leg of C2. Connect the black lug 1 wire to ground. The lug 2 wire is now the output. Connect it to the newly repositioned jumper cable that connects to the output jack

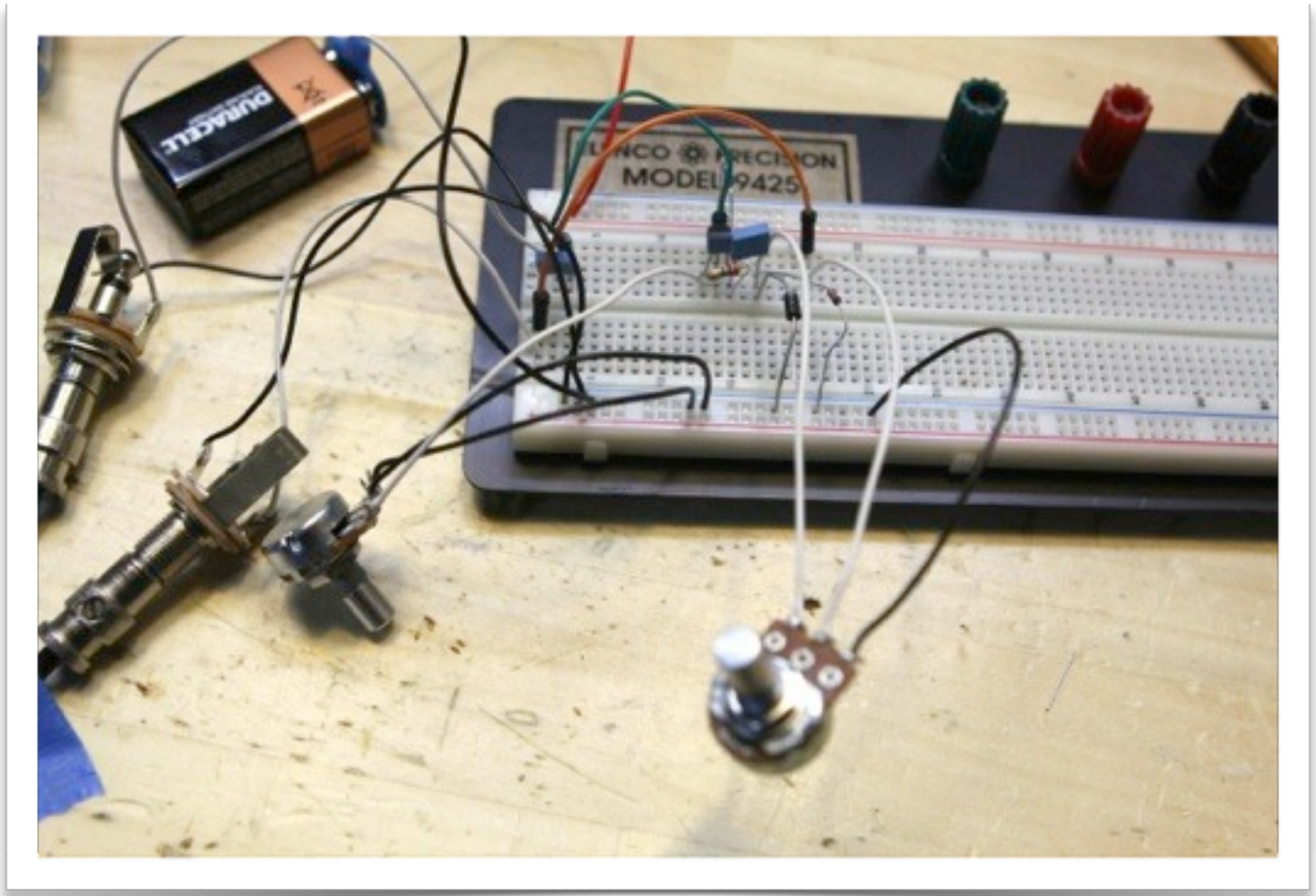

©2011 by Joe Gore

Adding the Volume Pot

You should now have a working volume control. Here's how it's depicted in schematic form:

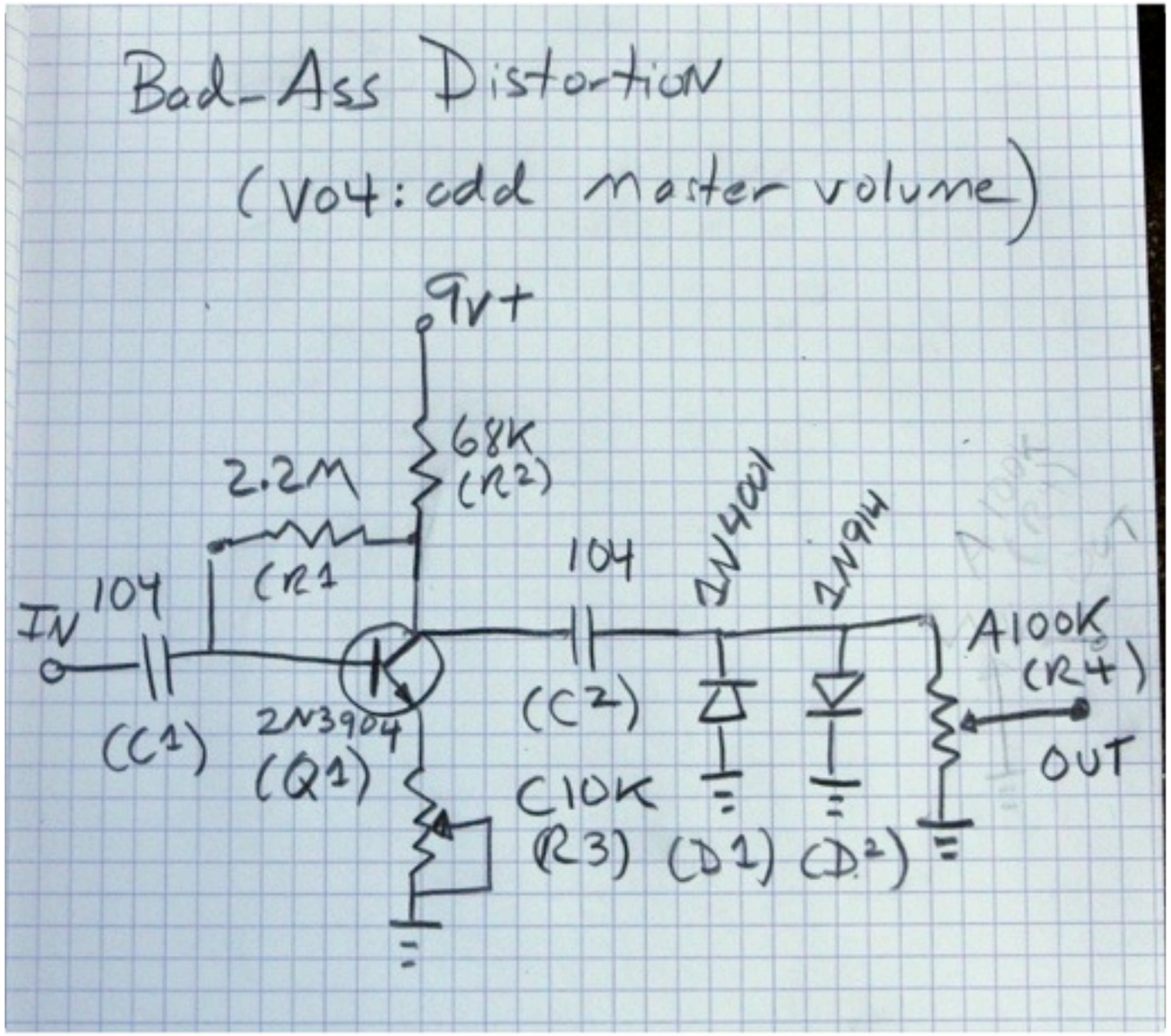

©2011 by Joe Gore

Modding Ideas

The circuit should sound pretty darn good at this point. But that doesn't mean you can't make it better. Try these mods:

1. The circuit is quite fat-sounding—maybe *too* fat. You can tighten it (at the expensive of some overall gain) by lowering the value of C1 from 104 to 683. (Yes, that *is* a smaller value, for reasons that will become clear if you Google "capacitor values.") You might even want to go down to a 473.

2. Replace the 2N3904 transistor with a relatively high-gain 2N5088. You should hear more distortion overall. Now try an even higher gain 2N5089. Pick your favorite.

3. Experiment further with different diode pairs (or trios, or quartets). You may find a new favorite recipe now that we've added a gain control, or if you changed any components in steps 1 and 2 above.

Once you decide on your favorite recipe, all we'll need to do is mount these components on a piece of stripboard, and then mount the stripboard in an enclosure. That's what will happen in parts 3 and 4 of this project.

©2011 by Joe Gore

Stuff to Think About

Even though this is a simple circuit, you're already doing what most big-name boutique builders do: jiggering with an extant circuit till you find something cool.

Much of this process boils down to nudging components up and down in value until you dig the results. For example, the three capacitor values we auditioned for C1 represent three common adjacent values. (We might also have tried a *larger* cap for more bass, such as a 154 or a 224.) We did something similar when we tried out different transistors offering varying amounts of gain.

We also tinkered with the circuit itself when we added or subtracted diodes, and when we replaced resistors with pots. Remember, you don't have to go with the circuit as depicted in v04 of the schematic. Maybe you like it better without any diodes. Maybe you don't want a gain control—you might prefer one "magic" value for R3, and just a single master volume knob.

The biggest takeaway here is the notion that you can design to suit your taste right from the start. This will become even clearer when we start working with switches in upcoming installments. Can't decide which value you like best for C1? Choose two or three of them, and make them switchable. Or switch between two different transistors. Or various diode combinations. Talk about owning your tone!

Extra-credit: Google the schematics for some of the boutique pedals that are very close to the circuit we've built, namely: Lovepedal Woodrow, Nick Greer Green Giant, Lovepedal COT 50, and Beavis Trotsky Drive. Procure the necessary parts and breadboard them!

©2011 by Joe Gore

"Me am all about 2N5089. Low gain-transistor for wuss."

©2011 by Joe Gore